Module 4 HMAC

Authentication requirement – Authentication function – MAC – Hash function – Security of hash function: HMAC,

Hashed MAC (HMAC)

HMAC Design Objectives

RFC 2104 lists the following design objectives for HMAC.

- To use, without modifications, available hash functions. In particular, to use hash functions that perform well in software and for which code is freely and widely available.
- To allow for easy replaceability of the embedded hash function in case faster or more secure hash functions are found or required.
- To preserve the original performance of the hash function without incurring a significant degradation.
- To use and handle keys in a simple way.
- To have a well understood cryptographic analysis of the strength of the authentication mechanism based on reasonable assumptions about the embedded hash function.

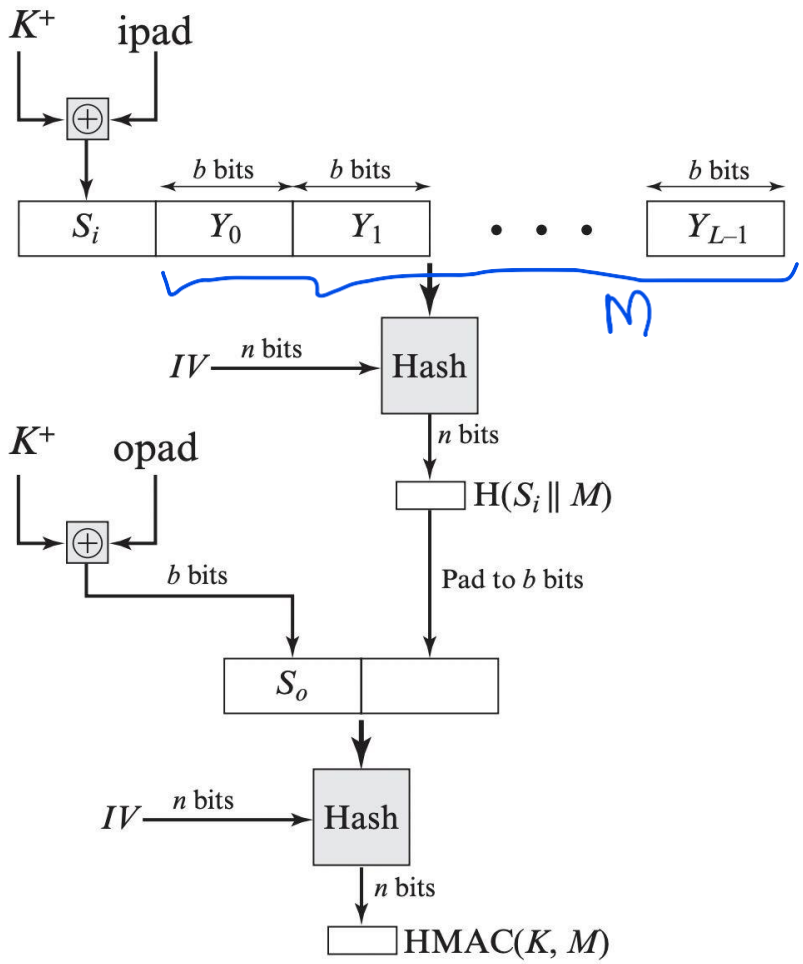

Figure 12.5 HMAC Structure

H = embedded hash function (e.g., MD5, SHA-1, RIPEMD-160)
IV = initial value input to hash function
M = message input to HMAC (including the padding specified in the embedded hash function)
Y_i = i th block of M, $0 \le i \le (L-1)$
L = number of blocks in M
b = number of bits in a block
n = length of hash code produced by embedded hash function
K = secret key; recommended length is $\ge n$; if key length is greater than b, the key is input to the hash function to produce an n-bit key
K^+ = K padded with zeros on the left so that the result is b bits in length

$\underbrace{1011}_{Y_0}\ \underbrace{0011}_{Y_1}$

$L = 2$

$b = 4$

$K = \underbrace{011}_{3}$ $K^+ \Rightarrow \underbrace{0}_{pad}\ \underbrace{011}_{K}$

ipad = 00110110 (36 in hexadecimal) repeated $b/8$ times
opad = 01011100 (5C in hexadecimal) repeated $b/8$ times

Then HMAC can be expressed as

$$\mathrm{HMAC}(K, M) = \mathrm{H}[(K^+ \oplus \mathrm{opad}) \| \mathrm{H}[(K^+ \oplus \mathrm{ipad}) \| M]]$$

Steps in HMAC

1. Append zeros to the left end of K to create a b-bit string K^+
2. XOR (bitwise exclusive-OR) K^+ with ipad to produce the b-bit block S
3. Append M to S_i.
4. Apply H to the stream generated in step 3.
5. XOR K^+ with opad to produce the b-bit block S_o.
6. Append the hash result from step 4 to S_o.
7. Apply H to the stream generated in step 6 and output the result.

Efficient HMAC

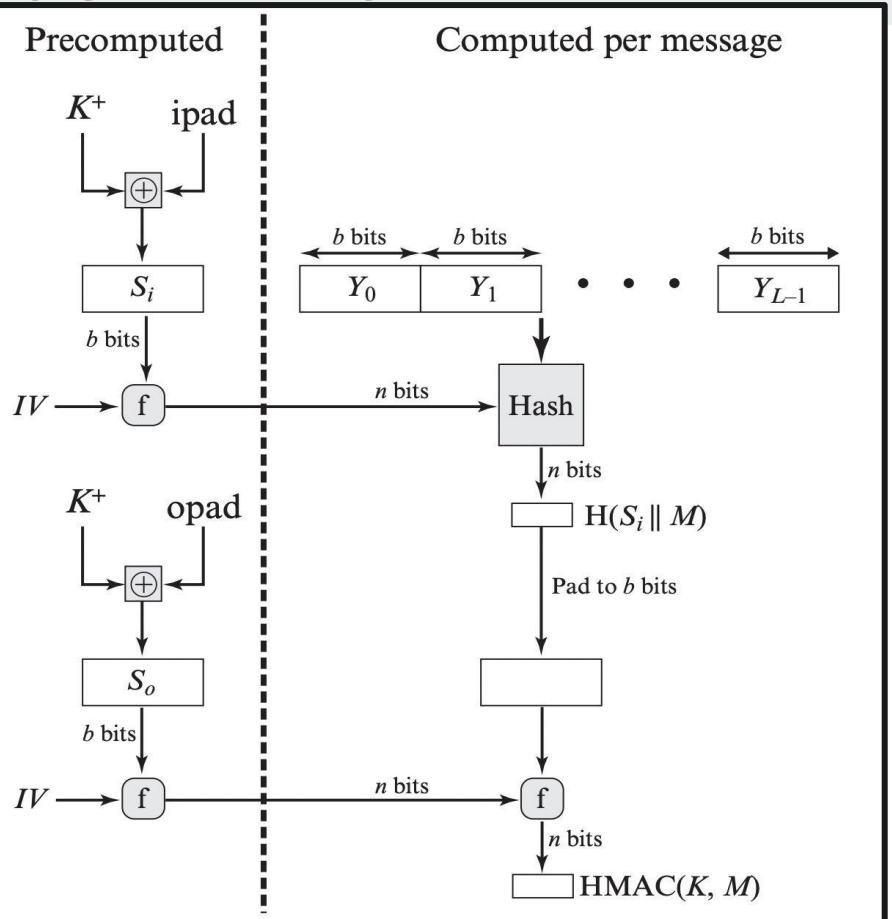

Figure 12.6 Efficient Implementation of HMAC

A more efficient implementation is possible, as shown in Figure 12.6. Two quantities are precomputed:

$$f(IV, (K^+ \oplus \text{ipad}))$$
$$f(IV, (K^+ \oplus \text{opad}))$$